## 电机规格 Motor Specifications

| | |
|---|---|
| 电机型号<br>Motor Model | X6MG550A-B4LA |
| 适配驱动器电压 V (rms)<br>Typical Drive Voltages | 380 |
| 直流母线电压 V (dc)<br>Basic DC Bus Voltage | 540 |
| 额定功率 kW<br>Rated Output Power | 5.5 |
| 额定转速 rpm<br>Rated Speed | 1500 |
| 最高转速 rpm<br>Max. Speed | 3000 |
| 额定转矩 Nm<br>Rated Torque | 35 |
| 堵转转矩 Nm<br>Continuous Stall Torque | 35 |
| 瞬时峰值扭矩 Nm<br>Peak Torque | 87.5 △4 |
| 额定电流 A (rms)<br>Rated Current | 19.5 |
| 堵转电流 A (rms)<br>Continuous Stall Current | 19.5 |
| 瞬时峰值电流 A (rms)<br>Peak Current | 51 △4 |
| 线反电势常数V (rms) / K rpm<br>Voltage Constant | 120.5 |
| 转矩常数Nm / A (rms)<br>Torque Constant | 1.98 |
| 线电阻 Ω @20° C<br>Winding Resistance (Line-Line) | 0.28 |
| 线电感mH (typ.)<br>Winding Inductance (Line-Line) | 6.4 △4 |
| 转子惯量kg m^2<br>Inertia | $106.5\times10^{-4}$ |
| 电气时间常数ms<br>Electrical Time Constant | 22.9 △4 |
| 极对数<br>Rotor Poles | 5 |
| 编码器<br>Encoder | 17位 绝对值 |
| 轴向载荷 N<br>Shaft Load - Axial | 588 |
| 径向载荷 N<br>Shaft Load - Radial (End of Shaft) | 1764 |
| 防护等级<br>Protection Class | IP65 |
| 绝缘等级<br>Insulation Class | F |
| 重量 kg<br>Weight | 28.5 |

## 制动器规格 Holding Brake Specifications

| | |
|---|---|
| 额定电压 DC(V)<br>Rated Voltage | 24±10% |
| 额定电流 A<br>Rated Current | 1.04 |
| 静摩擦转矩(N.m)<br>Static Friction Torque | > 74 |
| 吸引时间 ms<br>Absorbing Time | ≤120 |
| 释放时间 ms<br>Releasing Time | ≤30 |
| 释放电压（V）<br>Releasing Voltage | > 0.5 |

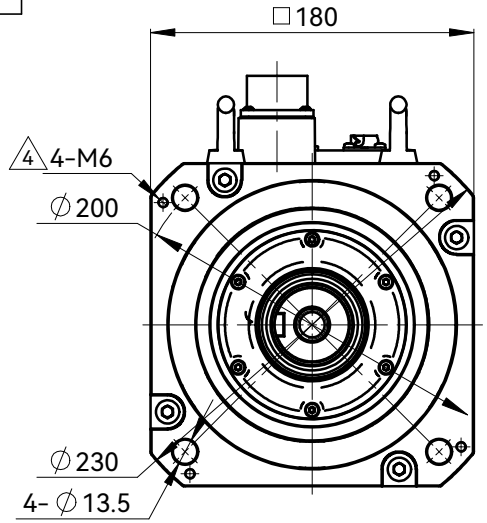


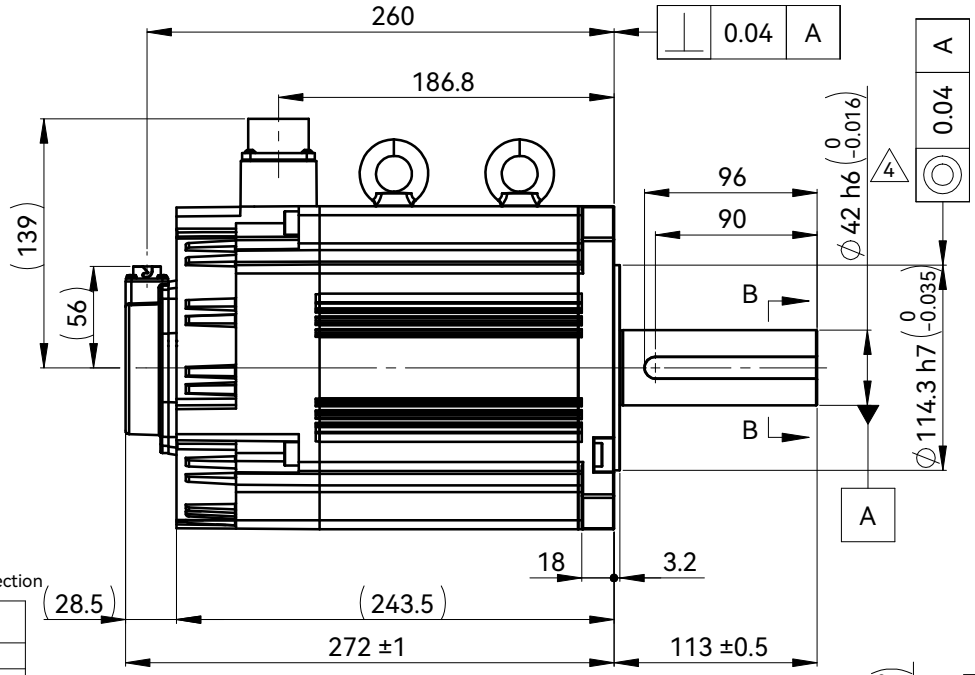


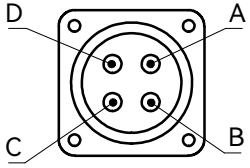


电机动力端Motor Power Connection

| 针位<br>PIN No. | 功能定义<br>Function |
|---|---|
| A | U |
| B | V |
| C | W |
| D | C.G |

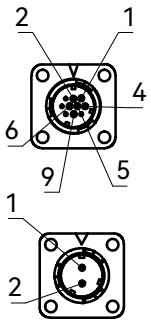


编码器端 Encoder Connection

| 针位<br>PIN No. | 功能定义<br>Function |
|---|---|
| 1 | VCC |
| 2 | GND |
| 3 | - |
| 4 | BAT |
| 5 | +D |
| 7 | - |
| 6 | -D |
| 8 | - |
| 9 | BAT- |
| 10 | SHIELD |

制动器端 Brake Connection

| 针位<br>PIN No. | 功能定义<br>Function |
|---|---|
| 1 | BK |
| 2 | BK |

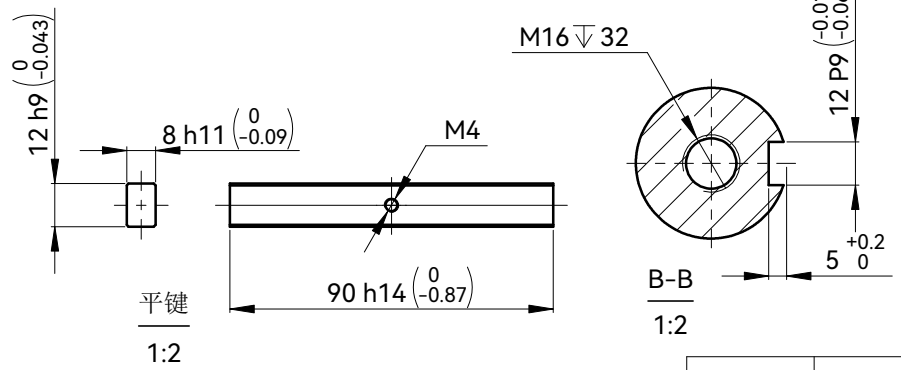


备注：

notes

1. GB/T 1096 键B12x8x90 随电机一起包装，但未安装。
   GB/T 1096 Key B12x8x90 is shipped with motor,but not installed.
2. 防护等级IP65(除了轴上没装油封和非密封连接器情况)。
   IP65 (except Shaft without seal and non-sealed connectors)

| 标记 | 处数 | 分区 | 更改文件号 | 签名 | 年月日 |
|---|---|---|---|---|---|
| △4 | 6 | | EC001966 | ZML | 062821 |
| △3 | 2 | | EC001701 | ZML | 091120 |
| △2 | 5 | | EC001380 | ZML | 120619 |

| | | | | | |
|---|---|---|---|---|---|
| 设计 | ZML | 062119 | 标准化 | | |
| | | | | | |
| 审核 | | | | | |
| 工艺 | | | 批准 | | |

| 阶段标记 | 重量 | 比例 |
|---|---|---|
| | | 1:4 |
| 共 张 | 第 张 | |

客户回签

HCFA 浙江禾川科技股份有限公司

伺服电机
(5.5kW带制动器)

X6MG550A-B4LA